Item Number	Part Number	Title	Material	Quantity
1	362	Wash Trough Type B 1200mm	Stainless Steel, 316	1
2	326	Wash Trough Type B - Bracket	Stainless Steel, 316	2

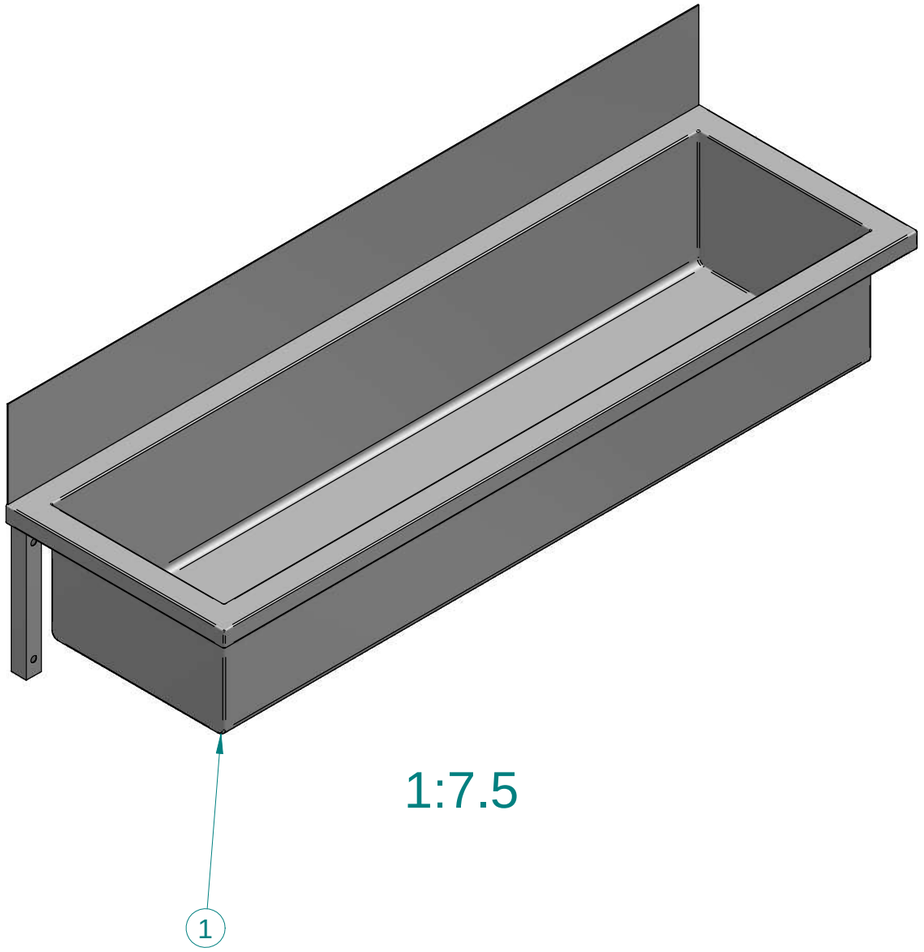

1:7.5

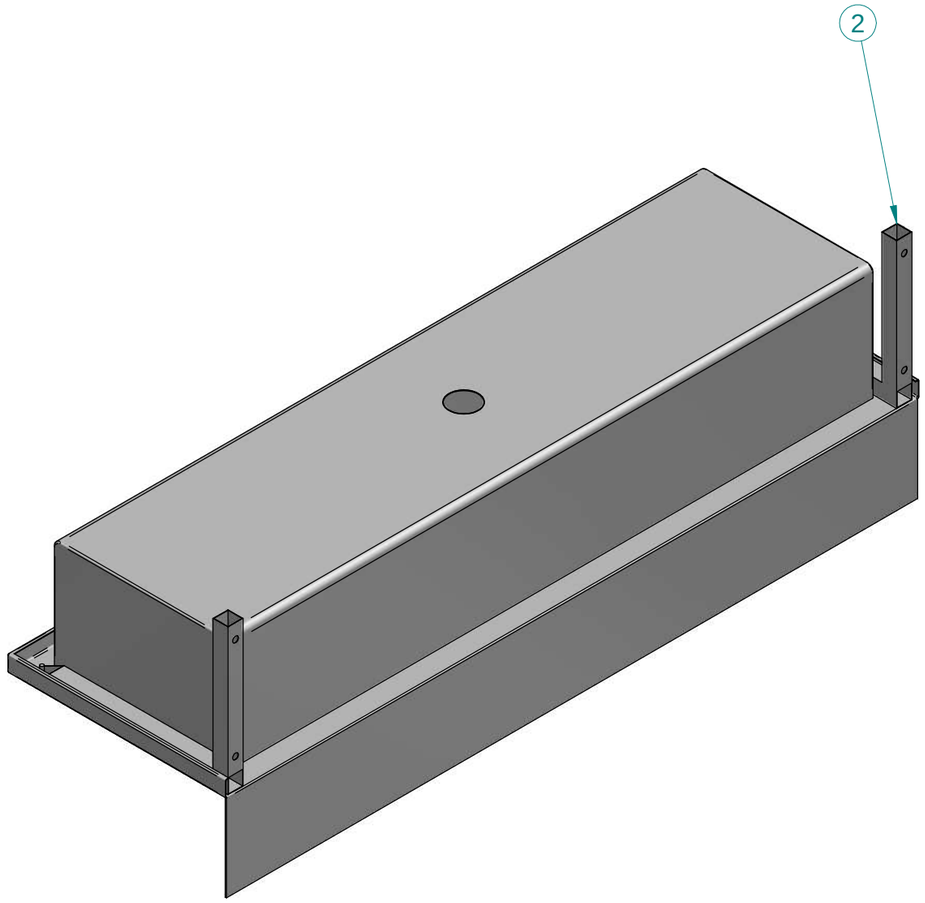

NOTE: ALL Dimensions are Reference!

Acero®
www.mercerinteriors.co.nz
45 Lunns Road Middleton Christchurch 8024 New Zealand
Phone: 0800 2637237

Title: Wash Trough Type B - 1200mm

Tolerances: (Unless Stated)
X. = ± 2.0
X.X = ± 1.0
X.XX = ± 0.5
Angles = ± 1.0°

Material:	Stainless Steel, 316	Third Angle Projection	Size: A4
Size:	0.9mm	All Dimensions in mm	
Finish:	-	Mass: 7.60 kg	Rev: 01
Form:	-	Sheet: 1 of 2	Status Released

Drawn By:	MDA-DN
Drawn Date:	07 Dec 2017
Checked By:	MDA-JB
Checked Date:	07 Dec 2017
Drawing No:	361

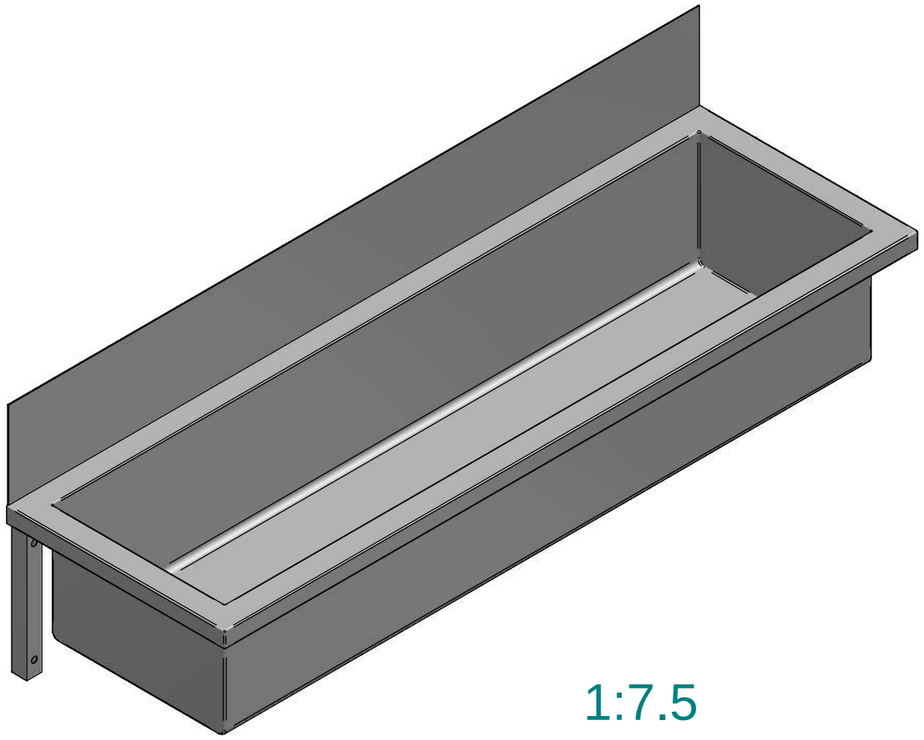

1:7.5

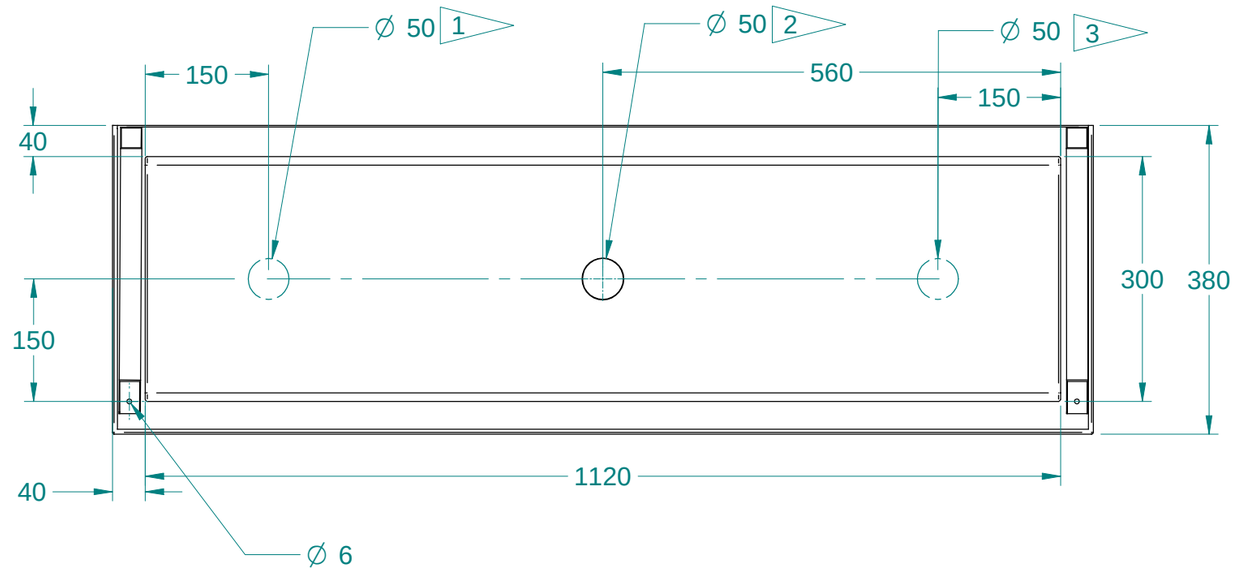

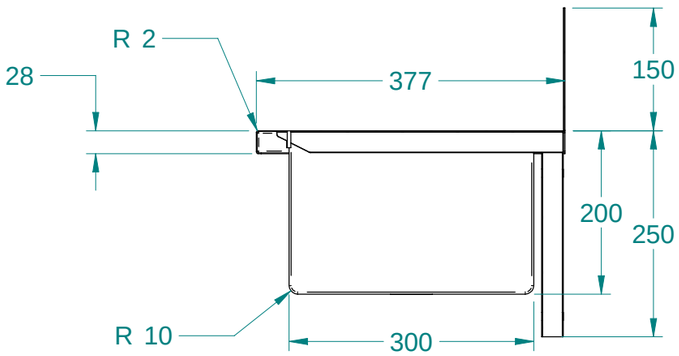

SECTION A-A

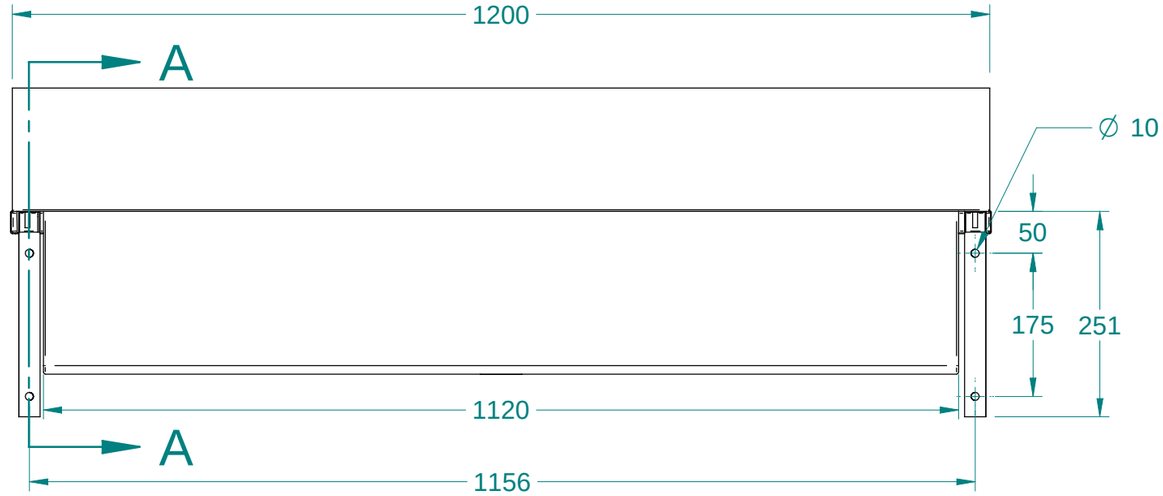

1 Available in left hand drain hole

2 Availabe in center drain hole

3 Availabe in right hand drain hole

NOTE: ALL Dimensions are Reference!

Acero®
www.mercerinteriors.co.nz
45 Lunns Road Middleton Christchurch 8024 New Zealand
Phone: 0800 2637237

Title: Wash Trough Type B - 1200mm				Drawn By:	MDA-DN
				Drawn Date:	07 Dec 2017
Tolerances: (Unless Stated)	Material: Stainless Steel, 316	Third Angle Projection	Size: A4	Checked By:	MDA-JB
X. = ± 2.0	Size: 0.9mm	All Dimensions in mm		Checked Date:	07 Dec 2017
X.X = ± 1.0	Finish: -	Mass: 7.60 kg	Rev: 01	Drawing No:	361
X.XX = ± 0.5	Form: -	Sheet: 2 of 2	Status Released		
Angles = ± 1.0°					