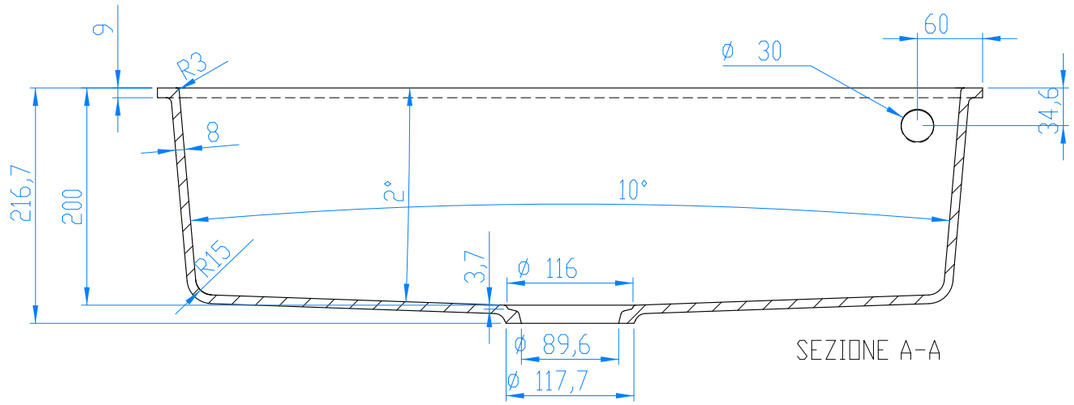

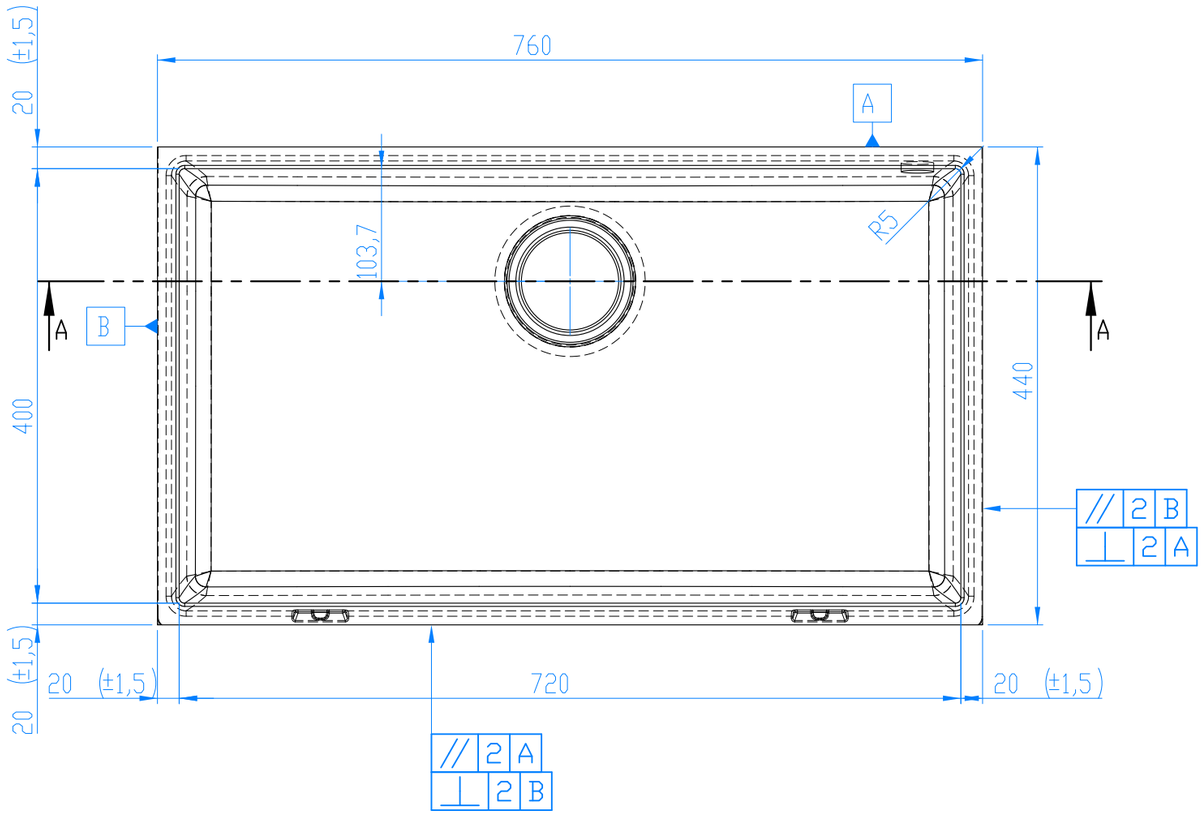

Acero™
On these shores since 1884

Cabinet 45 ☐ 50 ☐ 60 ☐ 80 ■ 90 ☐ 120 ☐			Inset Hole: 720X400 R5
Dis. N°	Del 30/08/2018	Sheet 1 of 1	Scale 1:5
www.acero.co.nz 45 Lunns Road Middleton, Christchurch 8024, New Zealand Phone: 0800 2637237		Duro Granite DG175U	
It is forbidden by law to disclose or reproduce the contents of this document			MOD7B.03